SHP-10K-HV series

User's Manual

Video

Forced-air cooling: Blank type

Front

Back

Dimension

L	*	W	*	H	
460	*	211	*	83.5(2U)	mm
18.1	*	8.3	*	3.29(2U)	inch

Water cooling: L type

Front

Back

Ordering No.: PGG1WHS-684

Dimension

L	*	W	*	H	
460	*	216	*	83.5(2U)	mm
18.1	*	8.5	*	3.29(2U)	inch

Parallel PFC c UL us UL62368-1 EN62368-1 EAC TPTC004 CB IEC62368-1 CE UKCA

Automate Industrial Telecom EV

Features

- 3ψ 3-wire / △ or Y 340~530VAC or 3ψ 4-wire / Y 340~530VAC
- High efficiency up to 97%
- Water / forced air cooling selectable
- Built-in CANBus/Optional PMBus/MODBus-RTU/RS-485 protocol
- Output voltage and constant current level programmable
- Active current sharing up to 4 units(40KW)
- Built-in remote ON-OFF control / Auxilary power / Alarm signal
- Protections: Short circuit / Overload / Over voltage / Over temperature / Fan fail
- 5 years warranty

Applications

- Energy & power system for automation
- U.V or laser diode application
- Electrolysis system
- Laser processing machine
- Burn-in facility
- RF application
- EV charging station

GTIN CODE

MW Search: https://www.meanwell.com/serviceGTIN.aspx

Description

SHP-10K-HV is a 10KW high efficiency AC/DC power supply. This series operates for the wide range three phase AC input neutral is not needed, and offers the models with DC outputs (55V/115V/230V/380V) that mostly demanded by various industries. Two types of cooling methods, forced air and water cooling, that can be working at ambient temperature up to 70℃. Moreover, SHP-10K-HV provides vast design flexibility by equipping various built-in functions such as output programming, active current sharing, remote ON-OFF control, auxiliary power, and communication protocols, that will not only satisfy marker demand, but also enhance automation purpose.

Model Encoding

SHP - 10K - 115 □ □

- Communication protocol option
- L: Water cooling / Blank: Forced air cooling
- Output voltage (55V/115V/230V/380V)
- Output wattage
- Series name

Type	Communication Protocol	Note
Blank	CANBus	In Stock
-PM	PMBus	By request
-MOD	MODBus-RTU/RS-485	By request

SPECIFICATION

MODEL		SHP-10K-55	SHP-10K-115	SHP-10K-230	SHP-10K-380
OUTPUT	DC VOLTAGE (factory default)	55V	115V	230V	380V
	CURRENT (factory default)	131A	87A	43.5A	26.3A
	CURRENT RANGE	0 ~ 150A	0 ~ 87A	0 ~ 46.3A	0 ~ 30A
	RATED POWER (max.)	7200W	10000W	10000W	10000W
	FULL POWER VOLTAGE RANGE	48 ~ 57.6V	115 ~ 138V	216 ~ 260V	334 ~ 400V
	RIPPLE & NOISE (max.) Note.2	0.3Vp-p	0.6Vp-p	1Vp-p	1Vp-p
	VOLTAGE ADJ. RANGE	39 ~ 57.6V	90 ~ 138V	170 ~ 260V	260 ~ 400V
		Can be adjusted via built-in potentiometer			
	VOLTAGE TOLERANCE Note.3	±1.0%	±1.0%	±1.0%	±1.0%
	LINE REGULATION	±0.5%	±0.5%	±0.5%	±0.5%
	LOAD REGULATION	±0.5%	±0.5%	±0.5%	±0.5%
	SETUP, RISE TIME	3000ms, 100ms at full load			
	HOLD UP TIME (Typ.)	25ms / 400VAC at 75% load	20ms / 400VAC at full load		
INPUT	VOLTAGE RANGE Note.5	3ψ 3-wire or 3ψ 4-wire			
	FREQUENCY RANGE	47 ~ 63Hz			
	POWER FACTOR (Typ.)	≧0.98/400VAC/480VAC at full load			
	EFFICIENCY (Typ.) Note.6	94.5%	96%	96.5%	96.5%
	AC CURRENT (Typ.)	11.2A/400VAC 9.5A/480VAC	15.7A/400VAC 13A/480VAC		
	INRUSH CURRENT (Typ.)	40A/400VAC 65A/480VAC			
	LEAKAGE CURRENT	<6.5mA peak / 530VAC			
PROTECTION	OVER LOAD	100 ~ 105% of rated current			
		Protection type : Constant current limiting, unit will shutdown after 5 sec. re-power on to recover			
	OVER VOLTAGE	60.5 ~ 69.1V	145 ~ 166V	273 ~ 312V	420 ~ 480V
		Protection type : Shut down o/p voltage, re-power on to recover			
	OVER TEMPERATURE	Shut down o/p voltage, recovers automatically after temperature goes down			
FUNCTION	CURRENT SHARING	Up to 4 units. Please refer to the Function Manual			
	OUTPUT VOLTAGE PROGRAMMABLE	Adjustment of output voltage is allowable between 50 ~ 120% of nominal output voltage. Please refer to the PV curve Function Manual			
	CONSTANT CURRENT LEVEL PROGRAMMABLE	Adjustment of constant current level is allowable between 20 ~ 100% of rated current. Please refer to the PC curve Function Manual			
	AUXILIARY POWER(AUX)	12V@1A tolerance±5%, ripple 150mVp-p			
	REMOTE ON-OFF CONTROL	Please refer to the Function Manual.			
	ALARM SIGNAL OUTPUT	AC-OK, DC-OK, Fan Fail. Please refer to the Function Manual.			
	DC-OK SIGNAL	The TTL signal output, PSU turn on = -0.5 ~ 0.5V ; PSU turn off = 3.5 ~ 5.5V. Please refer to the Function Manual			
ENVIRONMENT	WORKING TEMP.	-30 ~ +70℃ (Refer to "Derating Curve")			
	WORKING HUMIDITY	20 ~ 90% RH non-condensing			
	STORAGE TEMP., HUMIDITY	-40 ~ +85℃, 10 ~ 95% RH non-condensing			
	TEMP. COEFFICIENT	±0.03%/℃ (0 ~ 50℃)			
	VIBRATION	10 ~ 500Hz, 2G 10min./1cycle, 60min. each along X, Y, Z axes			
SAFETY & EMC (Note 7)	SAFETY STANDARDS	UL62368-1, CAN/CSA C22.2 No. 62368-1, TUV BS EN/EN62368-1, EAC TP TC 004 approved			
	WITHSTAND VOLTAGE Note.4	I/P-O/P:3.75KVAC I/P-FG:2KVAC O/P-FG:1.25KVAC			
	ISOLATION RESISTANCE Note.4	I/P-O/P, I/P-FG, O/P-FG:100M Ohms / 500VDC / 25℃/ 70% RH			
	EMC EMISSION	**Parameter**	**Standard**	**Test Level / Note**	
		Conducted	BS EN/EN55032 (CISPR32) / EN55011 (CISPR11)	Class A	
		Radiated	BS EN/EN55032 (CISPR32) / EN55011 (CISPR11)	Class A	
		Harmonic Current	BS EN/EN61000-3-2	-----	
		Voltage Flicker	BS EN/EN61000-3-3	-----	
	EMC IMMUNITY	EN55024 , EN61204-3, EN61000-6-2			
		Parameter	**Standard**	**Test Level / Note**	
		ESD	BS EN/EN61000-4-2	Level 3, 8KV air ; Level 2, 4KV contact	
		Radiated	BS EN/EN61000-4-3	Level 3	
		EFT / Burst	BS EN/EN61000-4-4	Level 3	
		Surge	BS EN/EN61000-4-5	Level 4, 4KV/Line-Earth ; Level 3, 2KV/Line-Line	
		Conducted	BS EN/EN61000-4-6	Level 3	
		Magnetic Field	BS EN/EN61000-4-8	Level 4	
		Voltage Dips and Interruptions	BS EN/EN61000-4-11	>95% dip 0.5 periods, 30% dip 25 periods, >95% interruptions 250 periods	
OTHERS	MTBF	281.2K hrs min. Telcordia SR-332 (Bellcore) ; 28K hrs min. MIL-HDBK-217F (25℃)			
	DIMENSION	SHP-10K: 460*211*83.5mm (L*W*H) SHP-10K-L: 460*216*83.5mm (L*W*H)			
	PACKING	SHP-10K: 11.9Kg; 1pcs/11.9Kg/1.25CUFT SHP-10K-L: 11.9Kg; 1pcs/11.9Kg/1.1CUFT			

NOTE

1. All parameters NOT specially mentioned are measured at 400VAC input, rated load and 25℃ of ambient temperature.
2. Ripple & noise are measured at 20MHz of bandwidth by using a 12" twisted pair-wire terminated with a 0.1uf & 47uf parallel capacitor.
3. Tolerance :includes set up tolerance, line regulation and load regulation.
4. During withstand voltage and isolation resistance testing, the screw "A" shall be temporarily removed, and shall be installed back after the testing.
5. Derating may be needed under low input voltages. Please check the derating curve for more details.
6. The efficiency is measured at 480VAC input.
7. The power supply is considered a component which will be installed into a final equipment. All the EMC tests are been executed by mounting the unit on a 600mm*900mm metal plate with 1mm of thickness. The final equipment must be re-confirmed that it still meets EMC directives. For guidance on how to perform these EMC tests, please refer to "EMI testing of component power supplies." (as available on https://www.meanwell.com//Upload/PDF/EMI_statement_en.pdf)
8. The ambient temperature derating of 3.5℃/1000m with fanless models and of 5℃/1000m with fan models for operating altitude higher than 2000m(6500ft).
9. If use PV signal to adjust Vo, under certain operations conditions, ripple noise of Vo might slightly go over rating defined in this specification.
10. Under light load condition, output voltage ripple will exceed specification. The behavior can be minimized by increasing the load.

※ Product Liability Disclaimer : For detailed information, please refer to https://www.meanwell.com/serviceDisclaimer.aspx

■ BLOCK DIAGRAM

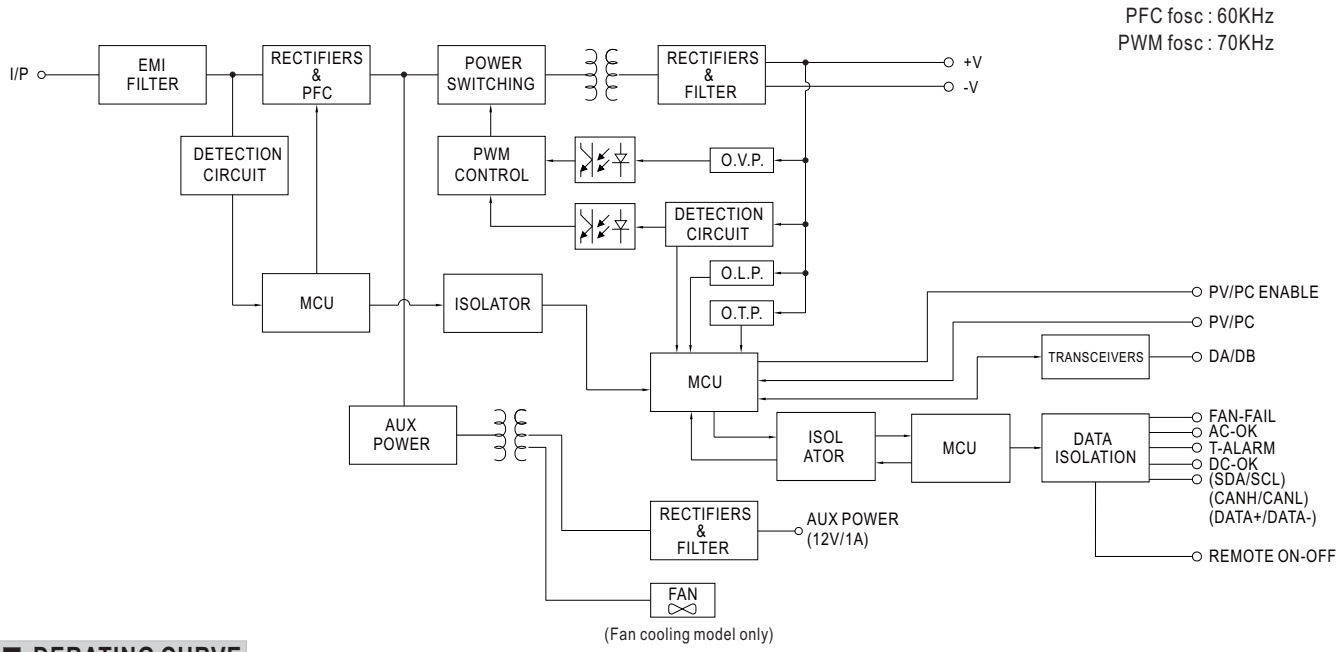

■ DERATING CURVE

Blank Type:

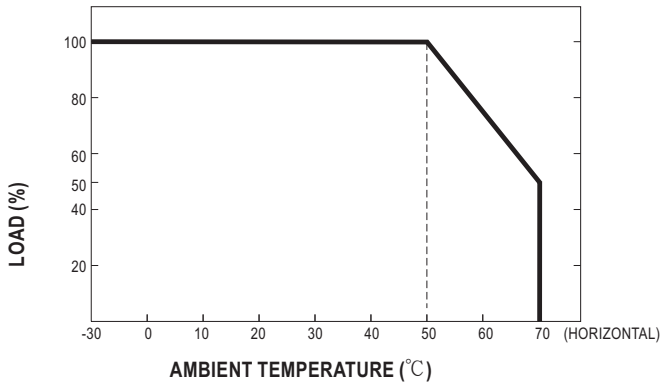

L Type:

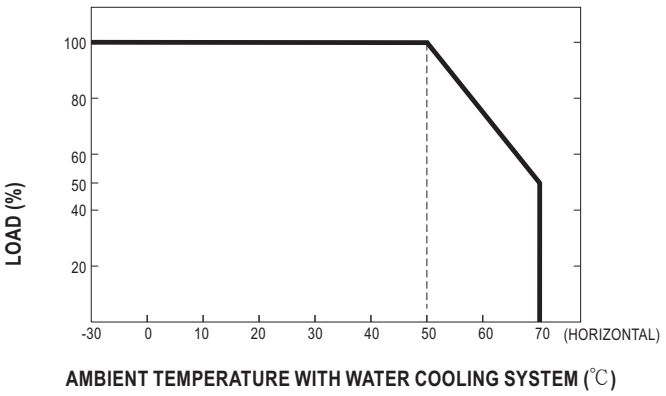

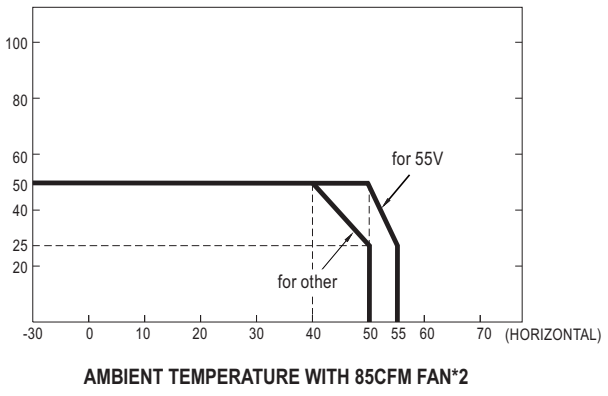

L Type:

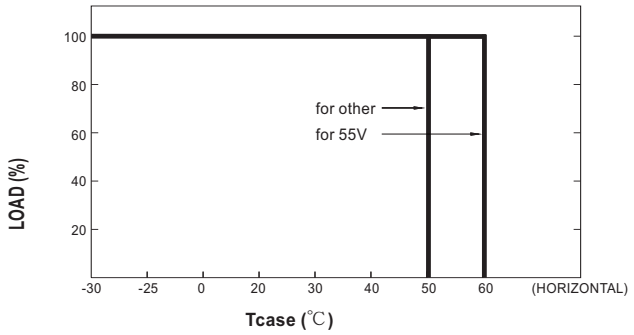

■ STATIC CHARACTERISTICS

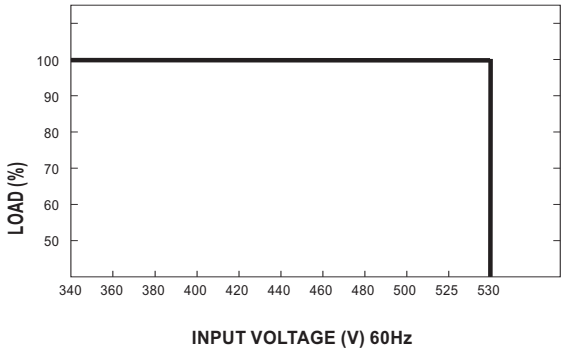

■ EFFICIENCY VS LOAD (380V MODEL)

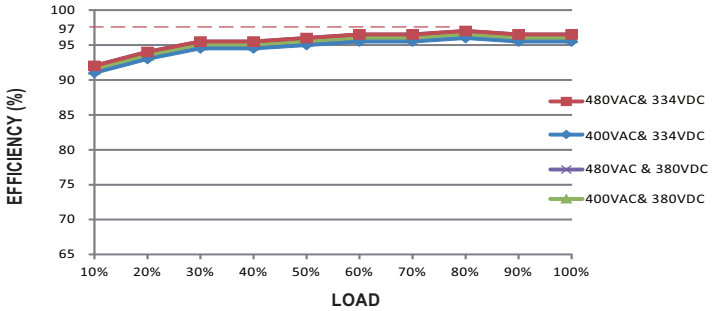

■ AC Power Connection

◎3 ψ 3-wire / △ 340VAC~530VAC

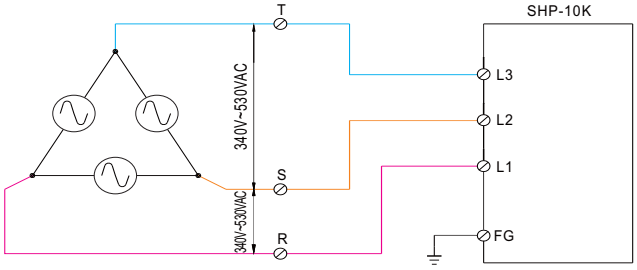

Fig 1.1

◎3 ψ 3-wire / Y 340VAC~530VAC

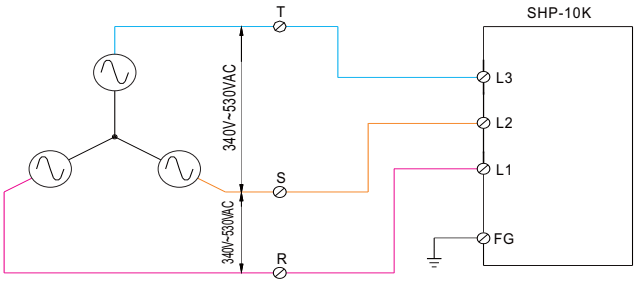

Fig 1.2

◎3 ψ 4-wire / Y 340VAC~530VAC

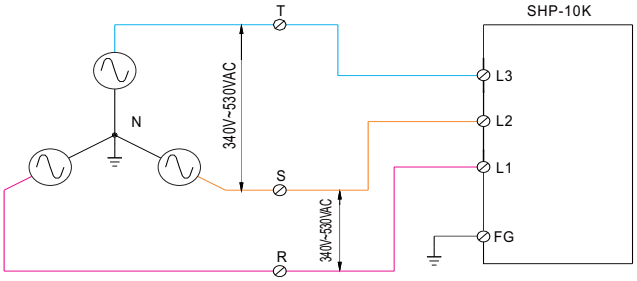

Fig 1.3

■ Function Manual

1.Output Voltage Programming (or, PV / remote voltage programming / remote adjust / margin programming / dynamic voltage trim)

(1)Default by potentiometer (SVR)

(a)Have the DIP switch position-3 set as

(b)Output voltage can be trimmed by SVR.

(2)By Output Voltage Programming

(a)Have the DIP switch position-3 set as

(b)The output voltage can be trimmed to 50~120% by applying EXTERNAL VOLTAGE between *PV+* and *PV-* on CN53.

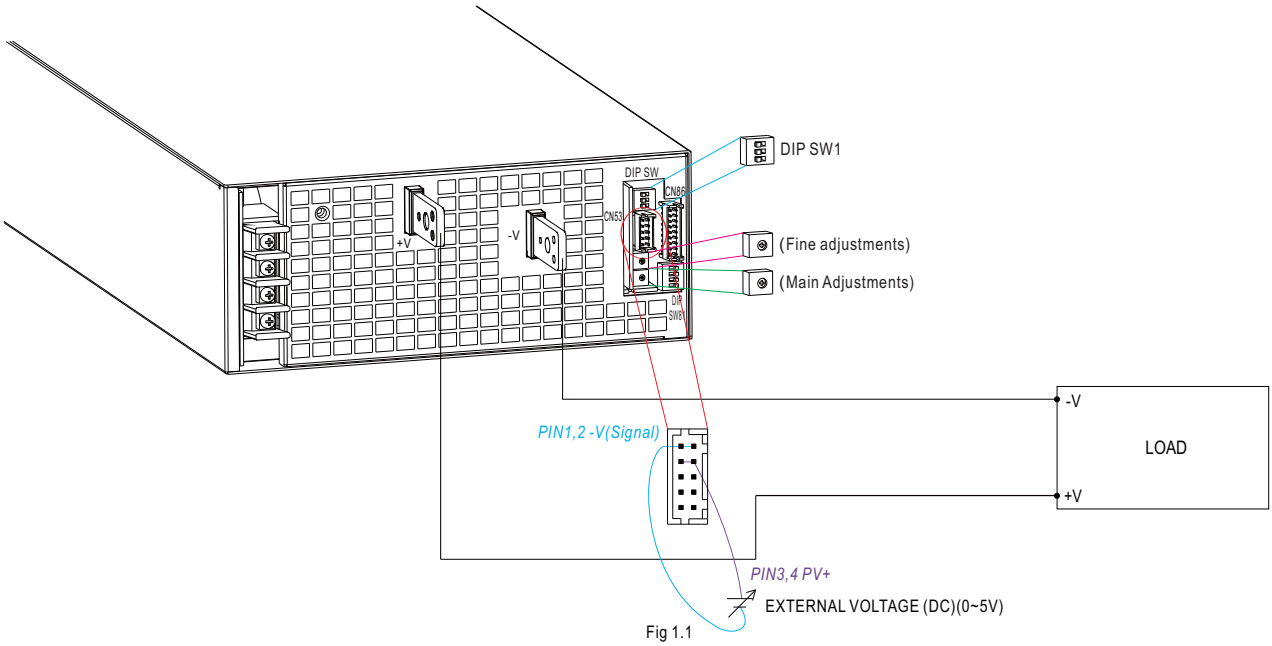

Fig 1.1

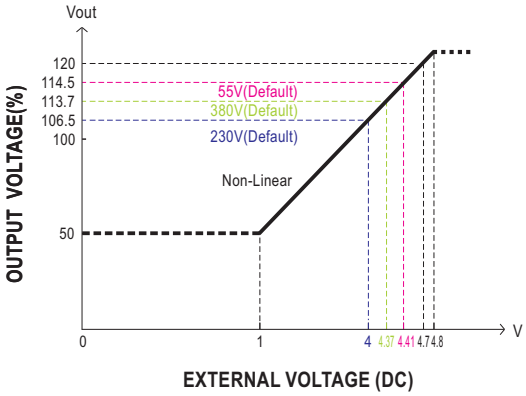

◎ The 100% output voltage is 48/115/216/334V.

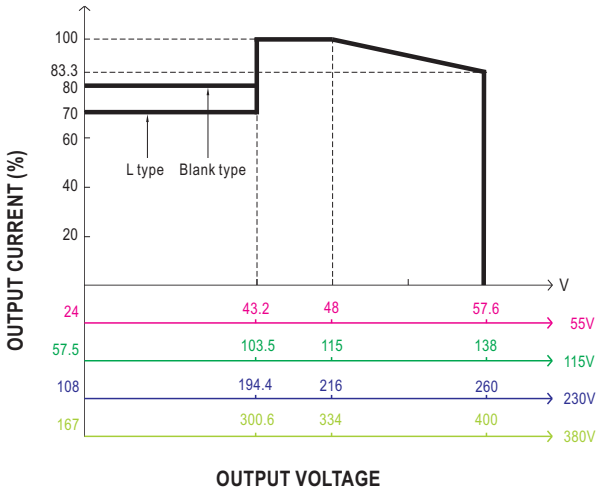

◎ The rated current should change with the Output Voltage Programming accordingly.

Fig 1.2

2.Constant Current Programming (or, PC / remote current programming / dynamic current trim)

(1)Default Overload Protection(OLP) value

(a)Have the DIP switch position-2 set as

(b)Output current is set default value.

(2)By Constant Current Level Programming

(a)Have the DIP switch position-2 set as

(b)The constant current level can be trimmed to 20~100% of the rated current by applying EXTERNAL VOLTAGE between *PC+* and *PC-* on CN53.

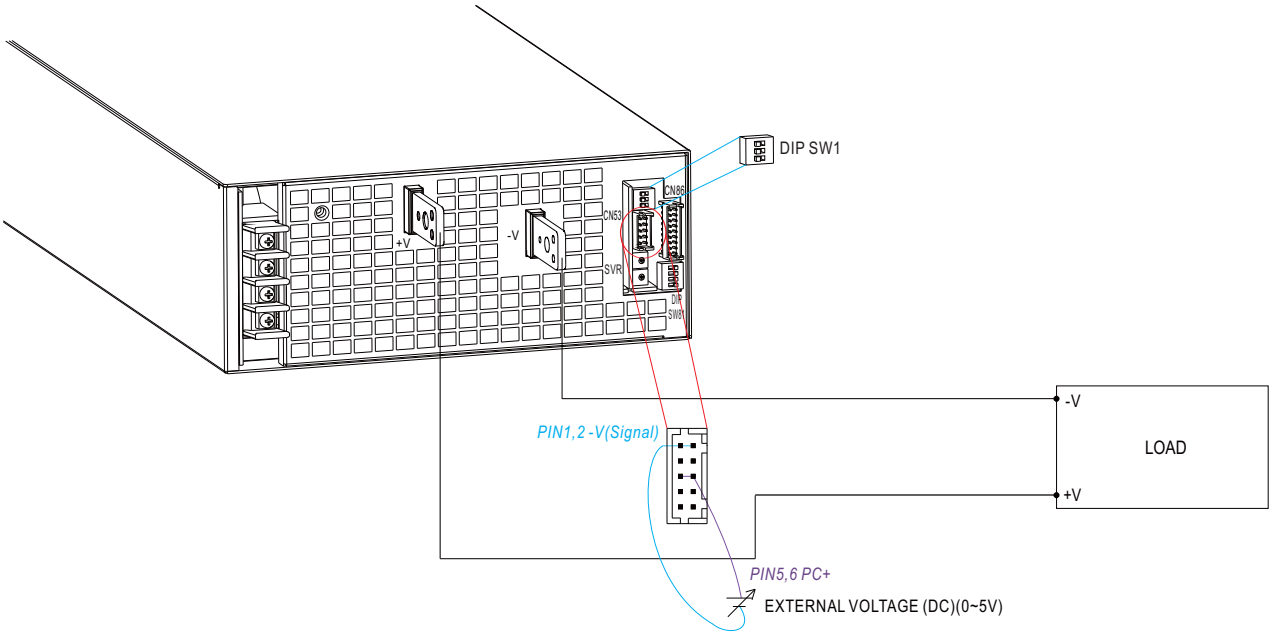

Fig 2.1

※ Under PC function at wattage < 4KW, the power supply might enter burst mode and cause output unstable, please increase the load to minimized the effect.

※ Auto de-rating function covered by over temperature protection, it works either in PC mode or under control by communication protocol.

$T_{1(Typ.)}$: Maximum ambient temperature of full load.

$T_{2(Typ.)}$: T1+5℃.

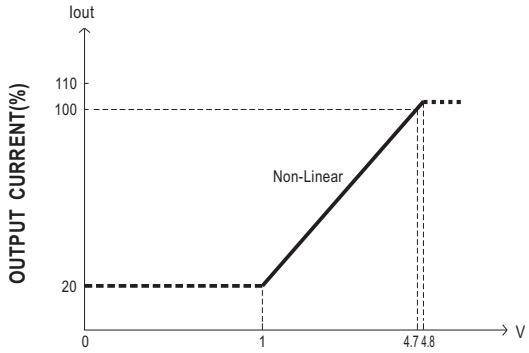

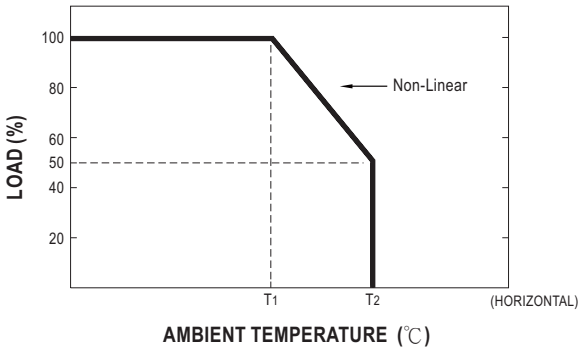

◎ The 100% output current is 150/87/46.3/30A.

Fig 2.2

3.DA, DB signal and parallel control function

(1)Non-parallel operation

(a)set the DIP switch of postion-1 as

(b)By default, non-parallel operation.

(2)Default parallel operation

(a)set the DIP switch of postion-1 as

(b)PSUs are configured in parallel operation.

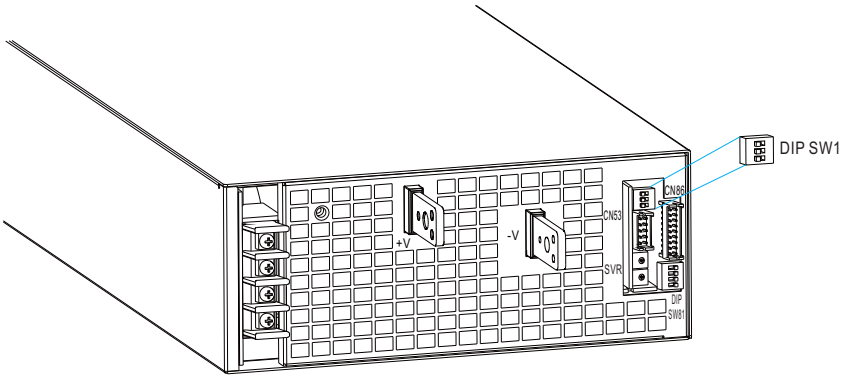

Fig 3.1

4.Remote ON-OFF Control

※ The power supply can be turned ON-OFF by using the "Remote ON-OFF" function.

Between *Remote ON-OFF*(*CN86 pin1*) and 5V-AUX(*CN86 pin2*)	Output Status
Switch close (Short)	power supply ON
Switch open (Open)	power supply OFF

Table 4.1

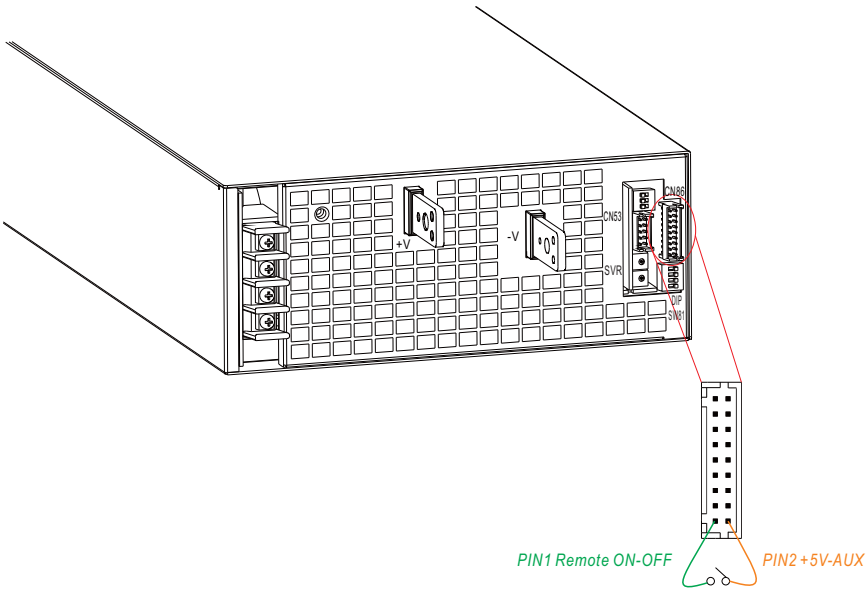

Fig 4.1

5.Alarm Signal Output

※ There are 4 alarm signals, DC-OK, T-ALARM, Fan Fail and AC-OK, in TTL signal form, on CN86. These signals are isolated from output.

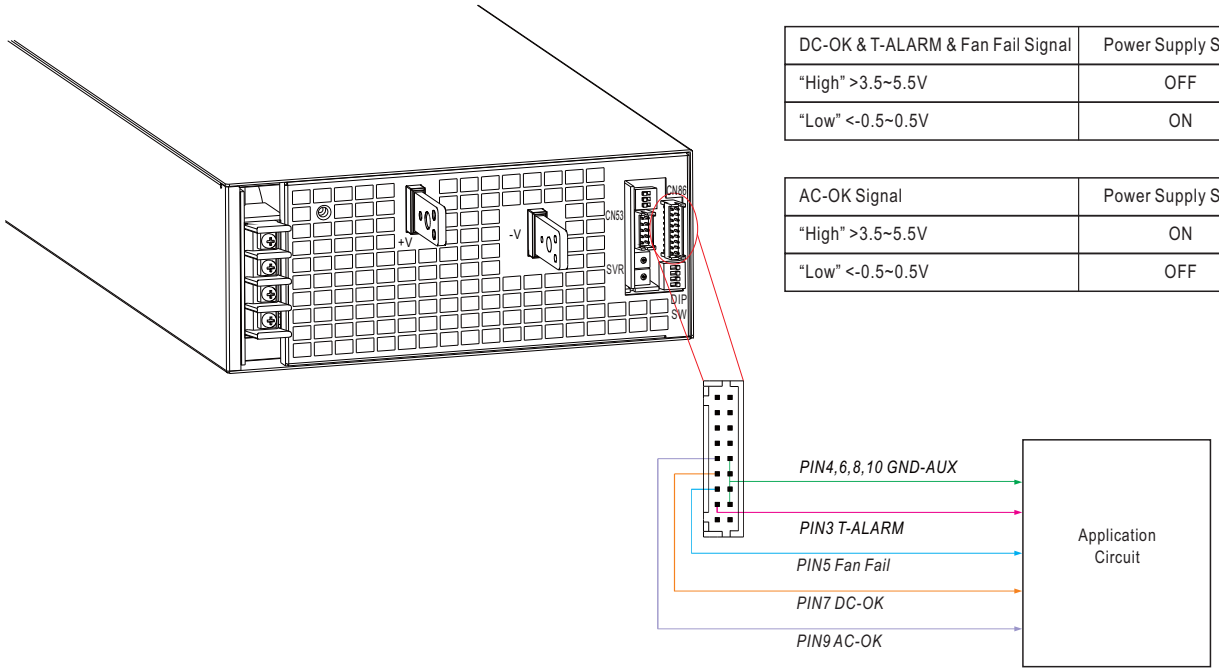

DC-OK & T-ALARM & Fan Fail Signal	Power Supply Status
"High" >3.5~5.5V	OFF
"Low" <-0.5~0.5V	ON

AC-OK Signal	Power Supply Status
"High" >3.5~5.5V	ON
"Low" <-0.5~0.5V	OFF

Fig 5.1

※ DC OK might mis-triggered when the voltage difference between PSU and the load, please minimized the unnecessary voltage difference.

6.Current Sharing

SHP-10K has the built-in active current sharing function and can be connected in parallel, up to 4 units, to provide higher output power as exhibited below :

※ The power supplies should be paralleled using short and large diameter wiring and then connected to the load.

※ In parallel connection, power supply with the highest output Voltage will be the master unit and its Vout will be the DC bus voltage.

※ The total output current must not exceed the value determined by the following equation:
Maximum output current at parallel operation=(Rated current per unit)×(Number of unit)×0.95

※ When the total output current is less than 5% of the total rated current, or say (5% of Rated current per unit)×(Number of unit) the current shared among units may not be balanced.

※ Under parallel operation ripple of the output voltage may be higher than the SPEC at light load condition. It will go back to normal ripple level once the output load is more than 5%.

※ CN53/SW1 Function pin connection

Parallel	PSU1		PSU2		PSU3		PSU4	
	CN53	SW1 PIN1	CN53	SW1 PIN1	CN53	SW1 PIN1	CN53	SW1 PIN1
1 unit	X	ON	—	—	—	—	—	—
2 unit	V	ON	V	ON	—	—	—	—
3 unit	V	ON	V	OFF	V	ON	—	—
4 unit	V	ON	V	OFF	V	OFF	V	ON

(V : CN53 connected ; X : CN53 not connected.)

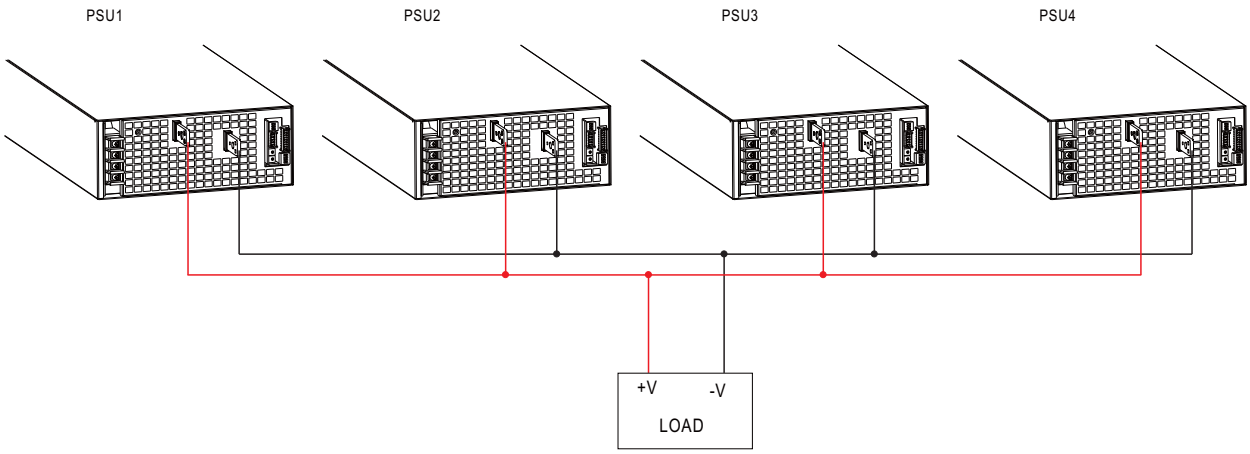

Fig 6.1

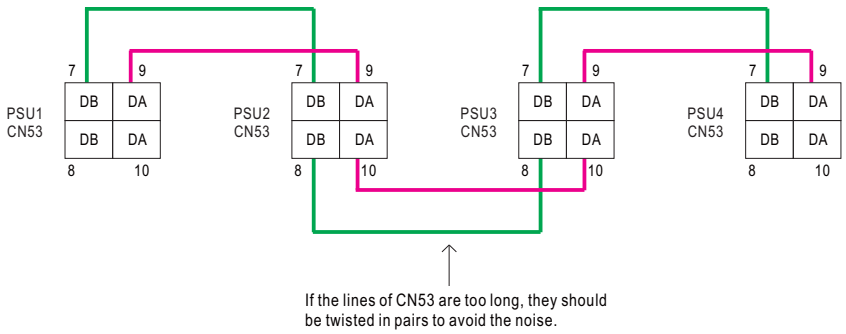

◎ DA,DB are connected mutually in parallel.

■ Mechanical Specification

(Unit: mm , tolerance ±0.5mm)

Case No.223

※ **Forced-Air Cooling (Blank type)**

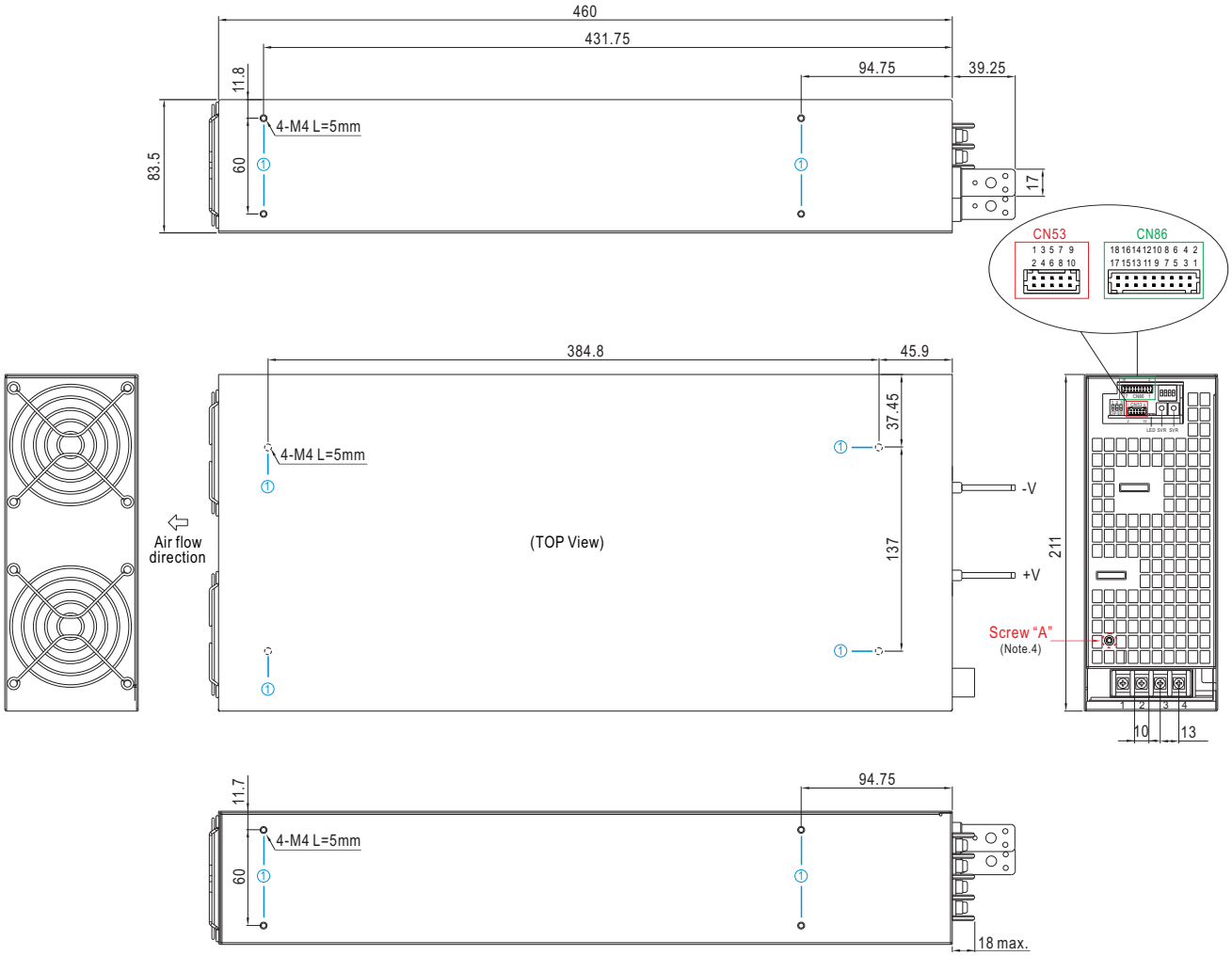

※ Mounting Instruction

Hole No.	Recommended Screw Size	MAX. Penetration Depth L	Recommended mounting torque
①	M4	5mm	7~10Kgf-cm

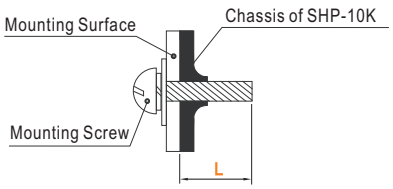

※ **Water Cooling (L type)**

Case No.295

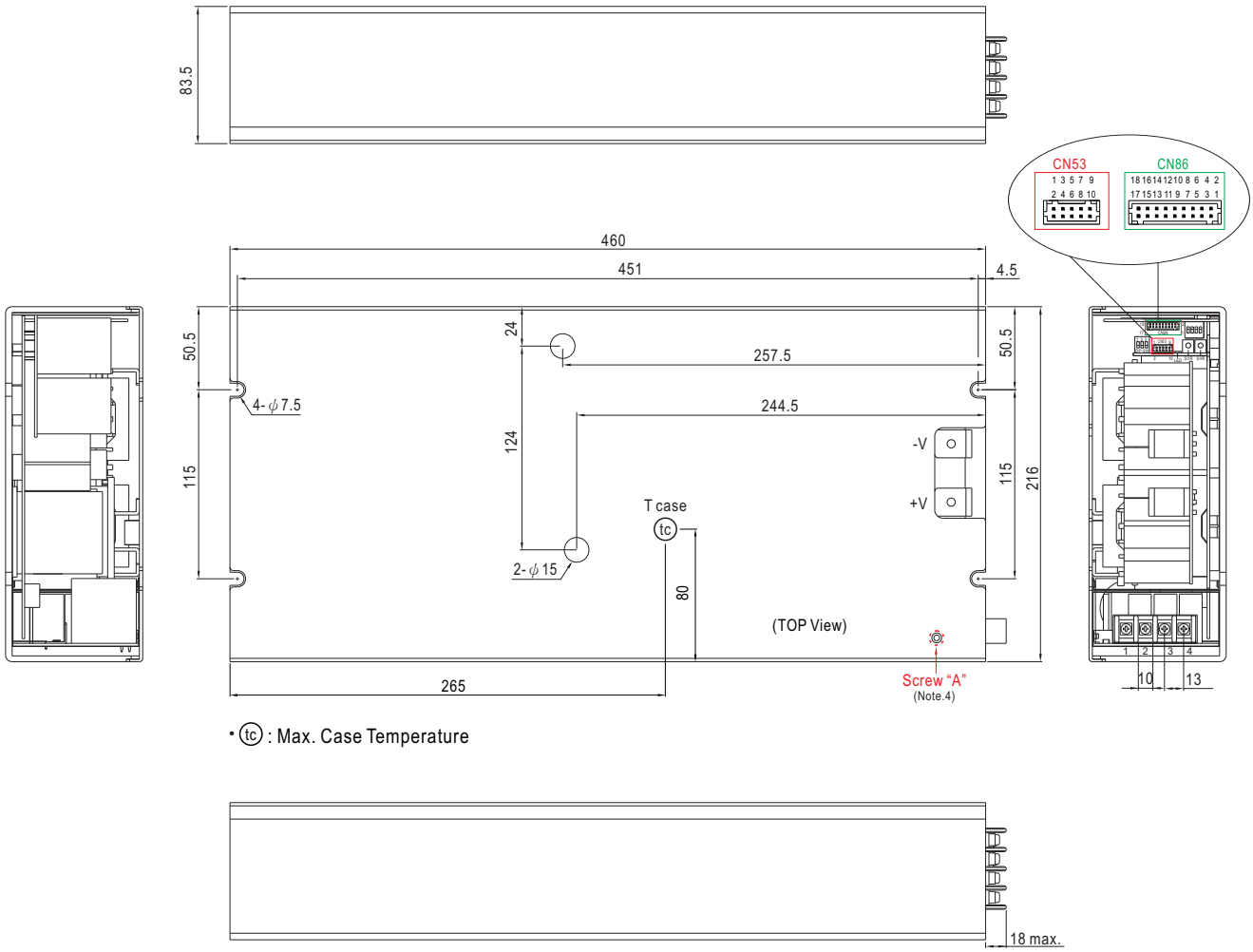

• tc : Max. Case Temperature

※ Control Pin No. Assignment (CN53) : HRS DF11-10DP-2DS or equivalent

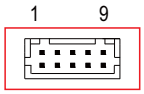

Mating Housing	HRS DF11-10DS or equivalent
Terminal	HRS DF11-**SC or equivalent

Pin No.	Function	Description
1,2	-V(Signal)	Negative output voltage signal. It is for local sense and certain function reference; it cannot be connected directly to the load.
3,4	PV+	Connection for output voltage programming. (Note)
5,6	PC+	Connection for constant current level programming. (Note)
7,8	DB	Differential digital signal for parallel control. (Note)
9,10	DA	Differential digital signal for parallel control. (Note)

Note: Non-isolated signal, referenced to [-V(Signal)].

※ Control Pin No. Assignment (CN86) : HRS DF11-18DP-2DS or equivalent

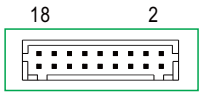

Mating Housing	HRS DF11-18DS or equivalent
Terminal	HRS DF11-**SC or equivalent

Pin No.	Function	Description
1	Remote ON-OFF	The unit can turn the output ON/OFF by dry contact between Remote ON/OFF and +5-AUX.(Note) Short (4.5 ~ 5.5V) : Power ON ; Open(0 ~ 0.5V) : Power OFF ; The maximum input voltage is 5.5V
2	+5V-AUX	Auxiliary voltage output, 4.5~5.5V, referenced to GND-AUX (pin 4,6,8,10,17,18) only for Remote ON/OFF used. This output is not controlled by the Remote ON/OFF control.
3	T-ALARM	High (3.5 ~ 5.5V) : When the internal temperature exceeds the limit of temperature alarm. Low (-0.5 ~ 0.5V) : When the internal temperature is normal. The maximum sourcing current is 10mA and only for output.(Note)
4,6,8,10	GND-AUX	Auxiliary voltage output GND. The signal return is isolated from the output terminals (+V & -V).
5	Fan Fail	High(3.5~5.5V):When the fan fail. Low(-0.5~0.5V):When the fan works normally. The maximum sourcing current is 10mA and only for output.(Note)
7	$\overline{\text{DC-OK}}$	High(3.5 ~ 5.5V) : When Vout≦80%±6%. Low(-0.5 ~ 0.5V) : When Vout≧80%±6%. The maximum sourcing current is 10mA and only for output.(Note)
9	AC-OK	High (3.5 ~ 5.5V): When AC input ≧335±1.5%Vac, PSU works normally. Low (-0.5 ~ 0.5V): When AC input ≦320±1.5%Vac, PSU shut down. The maximum sourcing current is 10mA and only for output.(Note)
11,12	SCL/CANL/ DATA-	For PMBus model: Serial Clock used in the PMBus interface.(Note)
		For CANBus model: Data line used in CANBus interface.(Note)
		For MODBus model: Data line used in MODBus interface.(Note)
13,14	SDA/CANH/ DATA+	For PMBus model: Serial Data used in the PMBus interface.(Note)
		For CANBus model: Data line used in CANBus interface.(Note)
		For MODBus model: Data line used in MODBus interface.(Note)
15,16	+12V-AUX	Auxiliary voltage output, 11.4~12.6V, referenced to GND-AUX (pin17 & 18). The maximum load current is 1A. This output is not controlled by “Remote ON-OFF”.
17,18	GND-AUX	Auxiliary voltage output GND. The signal return is isolated from the output terminals(+V & -V).

Note: Isolated signal, referenced to (GND-AUX).

※LED Status Indicators

LED	Description
Green(LED1)	LED on when output voltage is OK
Red(LED2)	LED on when any protection occurs

※AC Input Terminal Pin No. Assignment (TB1)

Pin No.	Assignment	Diagram	Maximum mounting torque
1	FG⏚		18Kgf-cm
2	AC/L1		
3	AC/L2		
4	AC/L3		

※DIP Switch Position Assignment(DIP-SW1): Please refer to the Function Manual.

Pin No.	Assignment	Diagram
1	DA,DB Signal and paralled control function	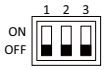 DIP-SW PIN2:PC DIP-SW PIN3:PV
2	Output Current Programming (PC)	
3	Output Voltage Programming (PV)	

※DIP Switch Position Assignment(DIP-SW81): Please refer to the Function Manual.

Pin No.	Function	Description
1	A0	PMBus/CANBus/MODBus interface address switch. (Max. 8 address)
2	A1	
3	A2	
4	RL	Termination resistors(120Ω) for communication.(CANBUS、MODBUS). ON: connect; OFF: disconnect.

1.Suitable for water cooling (L type)

Ambient temperature: 50℃
Inlet temperature: 5~15℃
Flow rate (minimum): 4~ 10LPM
Humidity: 20~90% RH non-condensing
Pressure drop 6 psi (minimum), pressure inlet 80 psi (maximum)

If optional cold plate is in need, please contact MEAN WELL for details.

Ordering No.:PGG1WHS-684

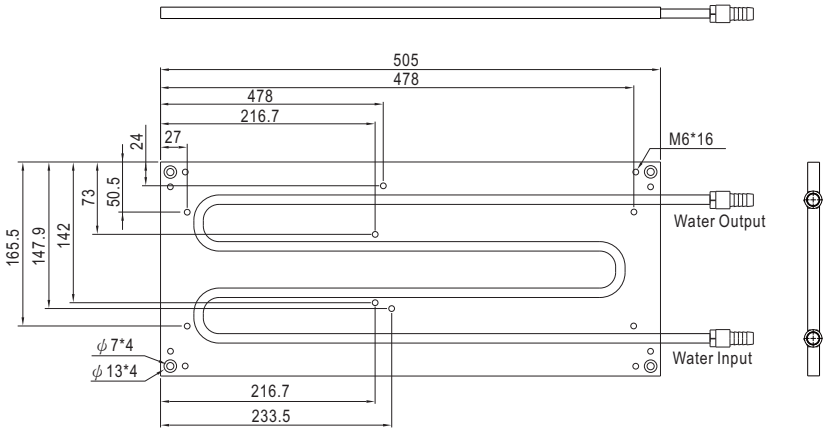

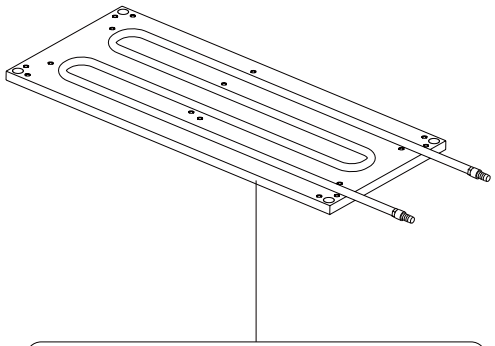

Apply thermal grease (gap filler) between power supply and cold plate connection surface.
Thermal grease (gap filler) :
* Thermal conductivity is no less than 1W/mK.
* Thickness is no more than 0.3mm.

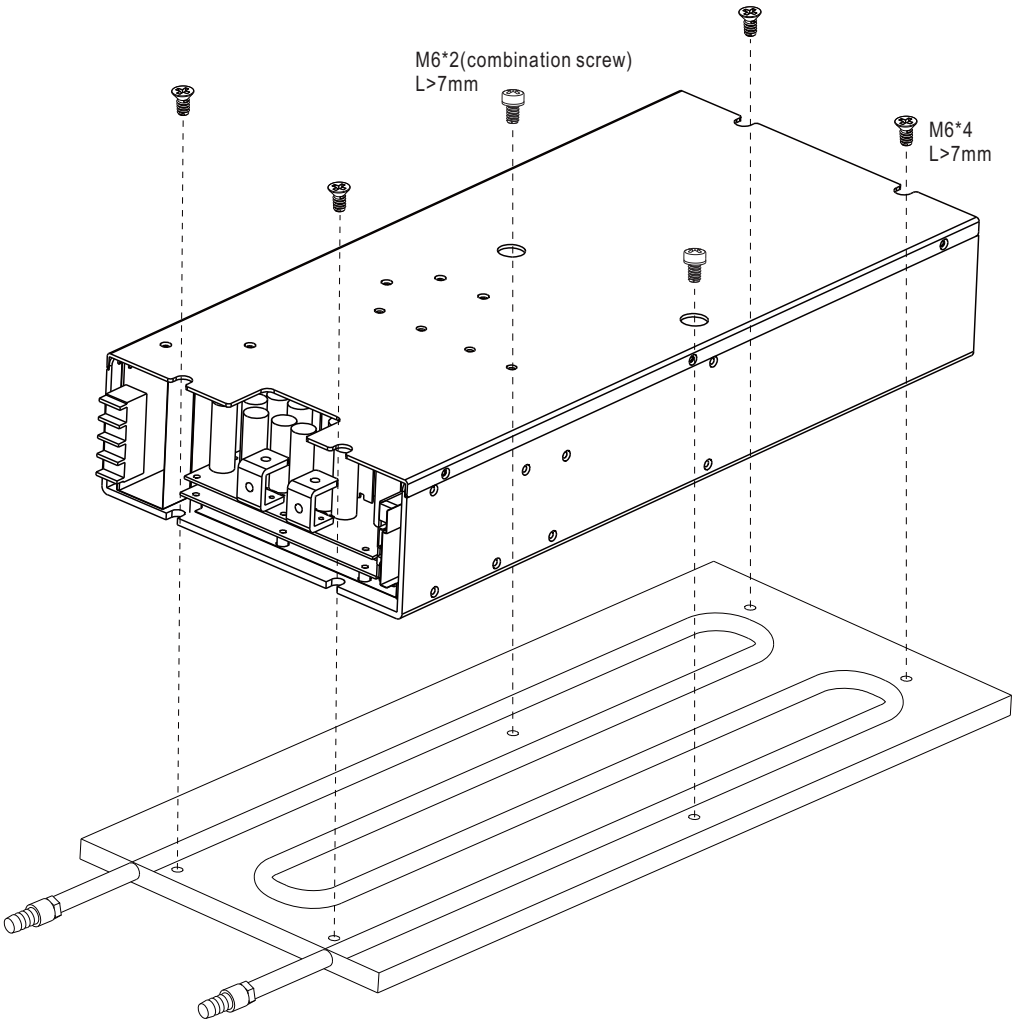
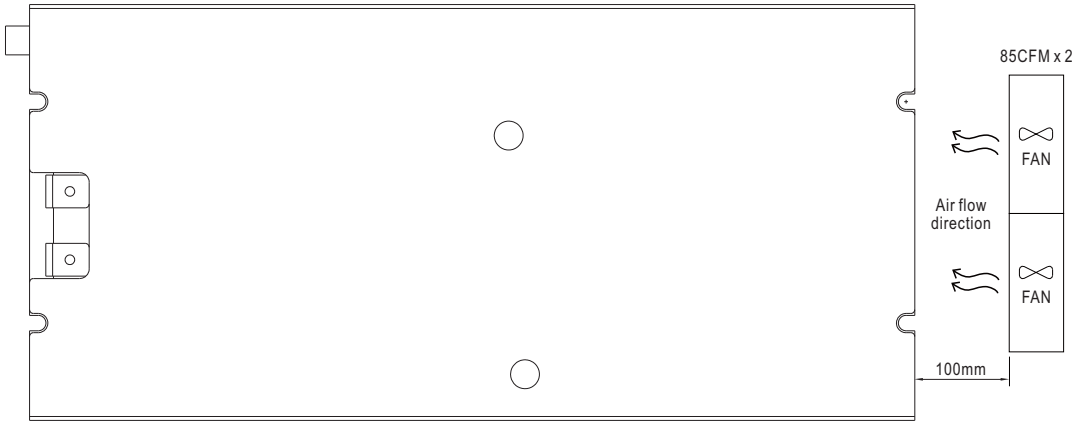
2.With 85CFM FAN x 2 (L type)