# Multi-Industry General Purpose Smart Controller

# CMU2 series

User's Manual

Video

## Standalone type

Front

Back

Bottom

## Rack mount type

Front

Back

Bottom

LED Automate Industrial Security Network Telecom Marine EV

## Features

- Integration on system power
- 2 models in 3U 19-inch rackmount and standalone configurations
- 7" touch Panel and buttons for easy on-site operation
- Ethernet port for on-site or remote monitor and control over the system
- Selectable PMBus, CANbus, RS-485, and RS-232 communication protocols
- Support Data/ Event log with date and time
- Support max. 32G SDHC SD card
- Four user programmable relay outputs for conventional remote monitoring or warning
- Web-based monitor/control UI provided for various applications
- 5 years warranty

## Applications

- Industrial automation
- EV Charging station
- Burn-in systems
- UV curing equipment
- Laser diode machines
- Telecommunication systems
- Horticulture lighting
- Building decoration lighting
- Inverter

## GTIN CODE

MW Search: https://www.meanwell.com/serviceGTIN.aspx

## Description

CMU2 is a fully digitalized smart controller that can execute tasks of monitoring and controlling over power system. CMU2 implements a 7" LCD touch panel to achieve intuitive operation, and developed a brand new web monitoring page for faster and smarter management . CMU2 not only being used to monitor the operating parameters and data of PSUs, such as output voltage, output current, internal temperature, fan rpm, series number and firmware version, but also can be used to adjust output voltage and current. In addition, it can remotely control single PSU or entire power system through LAN or internet.

## Model Encoding

**CMU2 [A] [-R]-[B] [C] [D]**

Slot 1 Slot 2 Slot 3

Extension cards (Note 1)
C: CANbus
P: PMBus
R: RS-232/RS-485/USB
#: Blank slot

-R: Rackmount type
Blank: Standalone

Application (Note 2)
A: Burn-in test system (optional)
B: Horticulture lighting (under developement)
C: Power management
D: EV Charging (under developement)
E: Inverter management
F: Other application (to be defined)

Series name

Note 1: Fixed by application
Note 2: Please contact MEAN WELL or access the installation manual

## SPECIFICATION

| MODEL (Note.8) | | CMU2□ | CMU2□-R |
|---|---|---|---|
| OUTPUT | LCD DISPLAY | Display the DC output voltage, current, and status of each PSU | |
| | LED INDICATOR | Green: Power on/ Normal Red: Fault/ Abnormal | |
| | RELAY CONTACT Note.4 | 4 user programmable channels, 30V/1A | |
| | ANALOG OUTPUT Note.4 | 5 user programmable channels, 0-10V | |
| | DIGITAL OUTPUT Note.4 | 5 user programmable channels, open collector signal | |
| INPUT | VOLTAGE RANGE | 85 ~ 264VAC; 120-370VDC | |
| | FREQUENCY RANGE | 47 ~ 63Hz | |
| | CURRENT | 0.6A / 115VAC 0.4A / 230VAC | |
| | ANALOG INPUT Note.4 | 5 Channels, 0-10V, 12bit resolution | |
| | DIGITAL INPUT Note.4 | 5 Channels, open collector signal | |
| FUNCTION | MONITORED | I/P & O/P Voltage, O/P current, temperature, fan rpm | |
| | COMM. INTERFACE Note.1 | PMBus, CANbus, RS-485, RS-232 | |
| | SD CARD SLOT | SDHC 32GB Max. | |
| | FIRMWARE UPDATE | Update can be done via SD card or Ethernet access | |
| | UI LANGUAGE | English, Traditional/Simplified Chinese | |
| | LOG | Record data and events | |
| | BUZZER | Alarms, mute | Button click & alarms, mute |
| COMMUNICATION PROTOCOLS | PMBUS Note.4 | PMBus v1.1 | |
| | CANBUS Note.4 | CANbus 2.0B | |
| | NETWORK | Support IEEE802.3, 10/100base network | |
| | EXTENSION CARDS Note.1 | Extension Cards | |
| ETHERNET SUPPORTED | PROTOCOLS | TCP/IP, NTP, SMTP, Modbus TCP | |
| | WEB SERVER | Display status of system, parameters, data being logged or download | |
| EXTENSION CARDS | PMBUS Note.7 | 2 PMBus ports, PMBus V1.1 | |
| | CANBUS Note.7 | 2 CANBus ports, CANBus 2.0B | |
| | USB/RS-232/RS-485 | 2 USB ports, RS-232 port, RS-485 port | |
| DISPLAY | LCD PANEL Note.2 | 7" TFT LCD, resolution 800x480, capacitive touch panel | |
| | | Details of settings please refer to user's manual | |
| ENVIRONMENT | WORKING TEMP. Note.2 | -25 ~ +60℃ | |
| | STORAGE TEMP. | -40 ~ +60℃ | |
| | VIBRATION | 10 ~ 500Hz, 2G 10min./1cycle, 60min. each along X, Y, Z axes | |
| SAFETY & EMC (Note 5) | SAFETY STANDARDS | IEC62368-1, BS EN/EN62368-1 approved | |
| | WITHSTAND VOLTAGE Note.3 | I/P-O/P:3KVAC I/P-FG:2KVAC O/P-FG:0.7KVDC | |
| | ISOLATION RESISTANCE Note.3 | O/P-FG:100M Ohms / 500VDC / 25℃/ 70% RH | |
| | EMC EMISSION | Compliance to BS EN/EN55032 (CISPR32) Conduction Class B, Radiation Class A ; BS EN/EN61000-3-2,-3 | |
| | EMC IMMUNITY | Compliance to BS EN/EN61000-4-2,3,4,5,6,8,11, BS EN/EN61000-6-1(BS EN/EN50082-2), light industry level, criteria A | |
| OTHERS | MTBF | 680K hrs min. Telcordia TR/SR-332 (Bellcore) ; 75.9K hrs min. MIL-HDBK-217F (25℃)(-C)<br>690.3K hrs min. Telcordia TR/SR-332 (Bellcore) ; 78.9K hrs min. MIL-HDBK-217F (25℃)(-E) | |
| | DIMENSION | 245*70*164.2mm (L*W*H) | 483.6*66.3*132mm (L*W*H) |
| | PACKING | 1.68Kg; 8pcs/14.4Kg/2.14CUFT | 2.16Kg; 6pcs/14Kg/2.91CUFT |

**NOTE**

1.Depend on application.
2.LCD may freeze under -20℃.
3.CN36,CN37 are considered as O/P.
4.All functions of signal connectors: DIN/DOUT,AIN/AOUT,Relay,RS-232,RS-485,PMBus,CANBus are defind by application. Please check installation manual for detail.
5.The controller is considered a component which will be installed into a final equipment. EMC is tested by the controller unit, no control equipment is connected. The final equipment must re-confirmed that still meets EMC directives. For guidance on how to perform these EMC test, Please refer to "EMI testing of component power supplies".(as available on https://www.meanwell.com//Upload/PDF/EMI_statement_en.pdf)
6.The RTC power supply used super capacitors, which can last for only 7 days. If the time exceeds the limit, the RTC date must be re-adjusted.
7.Up to 40 power supplies can be operate in parallel connection, and possible up to 48 power supplies.
8.Order model only CMU2C-P##, CMU2C-R-P##, CMU2C-C##, CMU2C-R-C## and optional CMU2A-#R# available.
※ Product Liability Disclaimer：For detailed information, please refer to https://www.meanwell.com/serviceDisclaimer.aspx

## ■ Mechanical Specification (Single Unit)

(Unit: mm , tolerance ±1mm)

Case No. CUM2

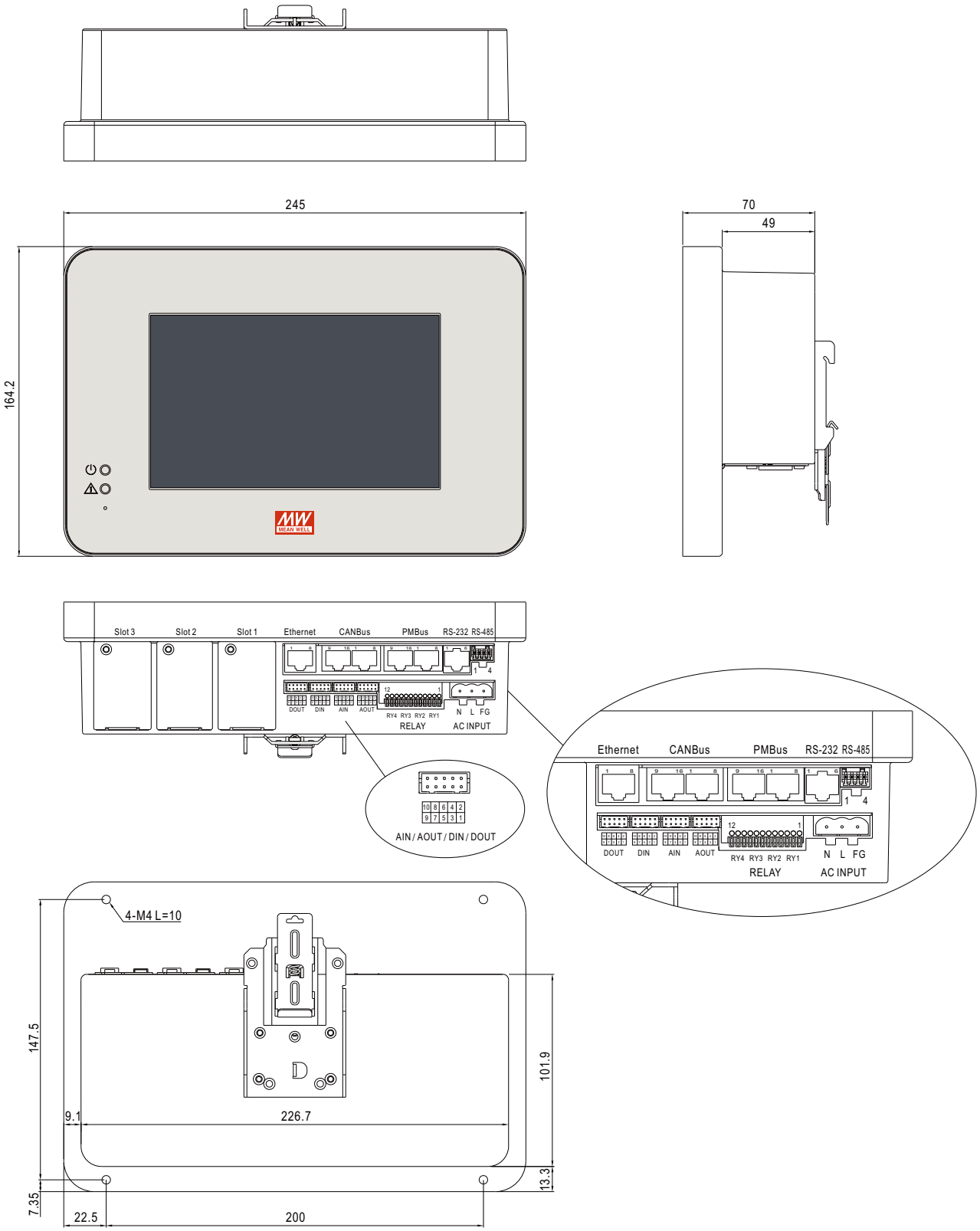

## ■ Mechanical Specification (Rack System)

(Unit: mm , tolerance ±1mm)

Case No. CMU2-RACK

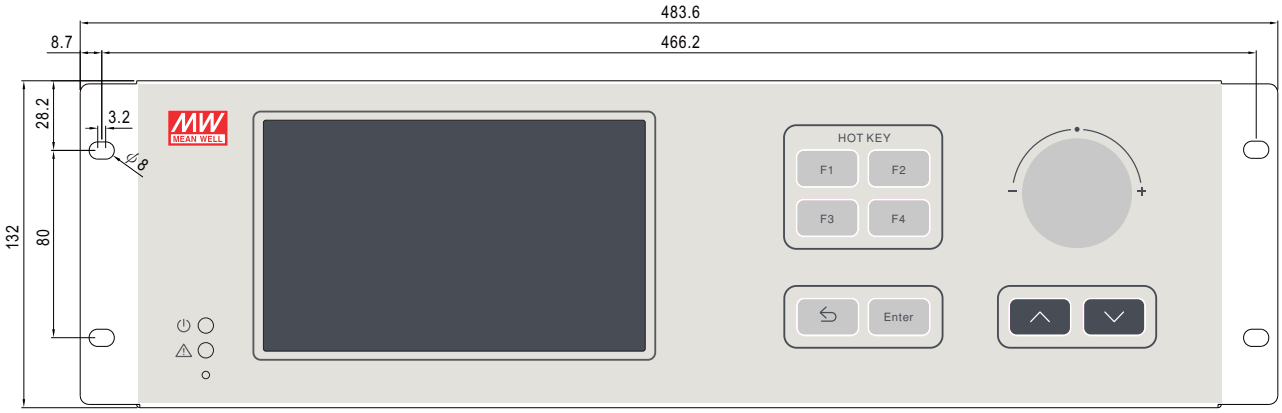


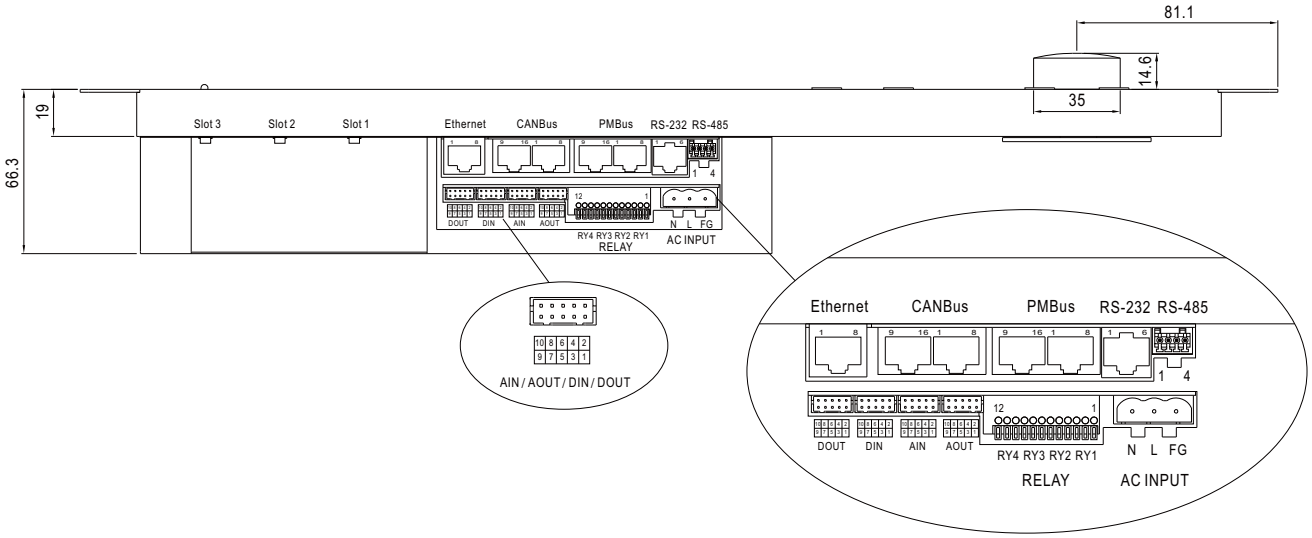


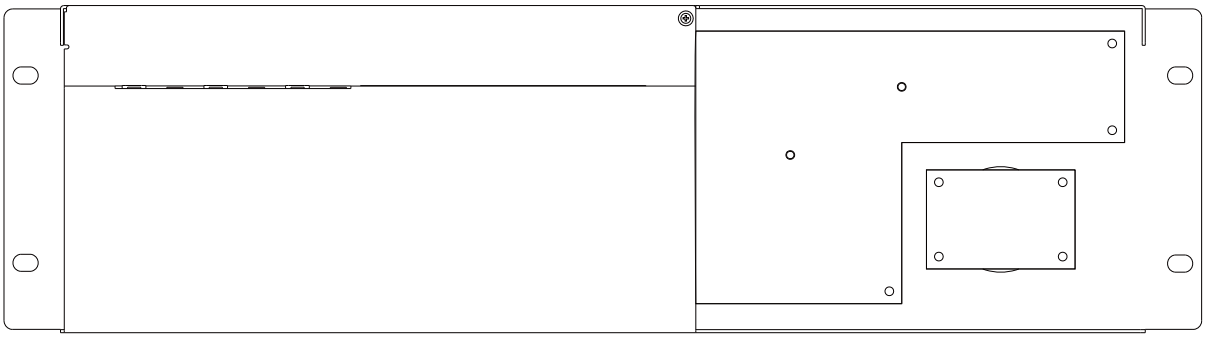

## ■ Mechanical Specification (Extension cards)

※ **PMBus(P card)**

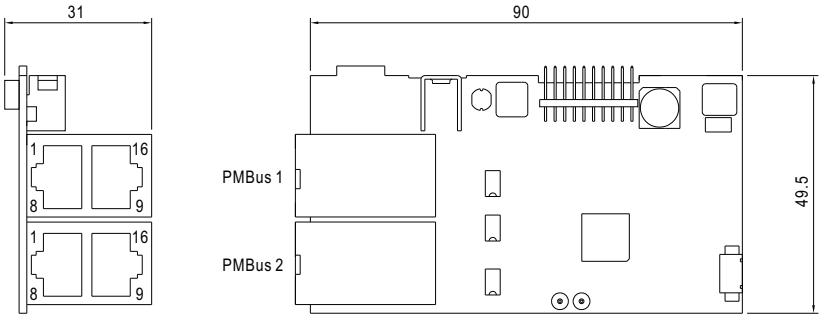


※ **CANBus(C card)**

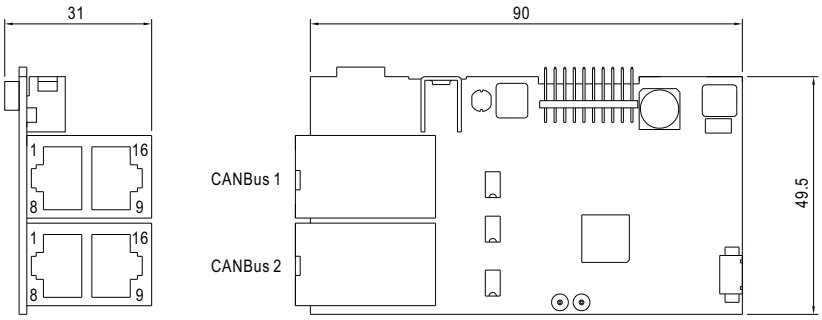


※ **RS-232/RS485/USB(R card)**

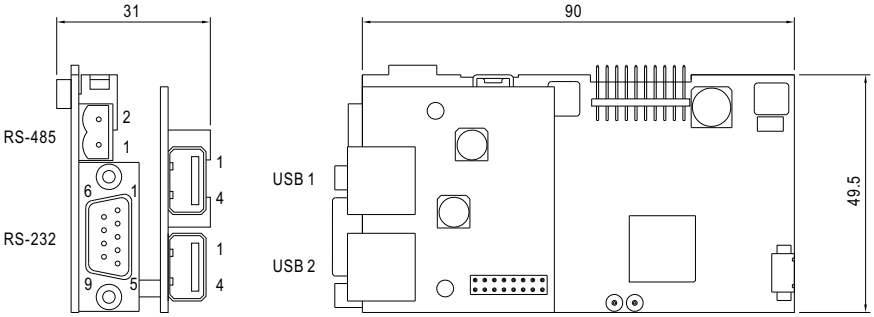

※ LED Status Indicators & Corresponding Signal at Function Pins

| LED | Description |
|---|---|
| Green | The power supply functions normally |
| Red | The LED will present a constant red light when the abnormal status arises |

※ AC IN Connector Pin No. Assignment (AC INPUT):

| Pin No. | Function | Description |
|---|---|---|
| 1 | AC/N | AC input neutral wire |
| 2 | AC/L | AC input live wire |
| 3 | FG | FG wire |

※ Relay Connector Pin No. Assignment (RELAY): DECA MX422-25412 or equivalent

| Pin No. | Function | Description |
|---|---|---|
| 1 | RY1-NO | Normal-open contact of programmable relay1 |
| 2 | RY1-NC | Normal-close contact of programmable relay1 |
| 3 | RY1-COM | Common for relay1 NO/NC contact |
| 4 | RY2-NO | Normal-open contact of programmable relay2 |
| 5 | RY2-NC | Normal-close contact of programmable relay2 |
| 6 | RY2-COM | Common for relay2 NO/NC contact |
| 7 | RY3-NO | Normal-open contact of programmable relay3 |
| 8 | RY3-NC | Normal-close contact of programmable relay3 |
| 9 | RY3-COM | Common for relay3 NO/NC contact |
| 10 | RY4-NO | Normal-open contact of programmable relay4 |
| 11 | RY4-NC | Normal-close contact of programmable relay4 |
| 12 | RY4-COM | Common for relay4 NO/NC contact |

※ AIN Connector Pin No. Assignment (AIN): HIROSE DF11-10 or equivalent

| Pin No. | Function | Description |
|---|---|---|
| 1 | AIN 1 | The Analog input signal with GND as reference |
| 2,4,6,8,10 | GND | Common GND for AINx |
| 3 | AIN 2 | The Analog input signal with GND as reference |
| 5 | AIN 3 | |
| 7 | AIN 4 | |
| 9 | AIN 5 | |

※ AOUT Connector Pin No. Assignment (AOUT): HIROSE DF11-10 or equivalent

| Pin No. | Function | Description |
|---|---|---|
| 1 | AOUT 1 | The Analog output signal with GND as reference |
| 2,4,6,8,10 | GND | Common GND for AOUTx |
| 3 | AOUT 2 | The Analog output signal with GND as reference |
| 5 | AOUT 3 | |
| 7 | AOUT 4 | |
| 9 | AOUT 5 | |

※ DOUT Connector Pin No. Assignment (DOUT): HIROSE DF11-10 or equivalent

| Pin No. | Function | Description |
|---|---|---|
| 1 | DOUT 1 | The isolated digital output signal with FG as reference<br>Open collector signal, Max. singal voltage is 5V with FG as reference |
| 2,4,6,8,10 | FG | Common FG for DOUTx |
| 3 | DOUT 2 | The isolated digital output signal with FG as reference<br>Open collector signal, Max. singal voltage is 5V with FG as reference |
| 5 | DOUT 3 | |
| 7 | DOUT 4 | |
| 9 | DOUT 5 | |

※ DIN Connector Pin No. Assignment (DIN)

| Pin No. | Function | Description |
|---|---|---|
| 1 | DIN 1 | The isolated digital input signal with FG as reference<br>Open from FG or +5V : Logic "1" input to CMU2<br>Short to FG or 0V : Logic "0" input to CMU2 |
| 2,4,6,8,10 | FG | Common FG for DINx |
| 3 | DIN 2 | The isolated digital input signal with FG as reference<br>Open from FG or +5V : Logic "1" input to CMU2<br>Short to FG or 0V : Logic "0" input to CMU2 |
| 5 | DIN 3 | |
| 7 | DIN 4 | |
| 9 | DIN 5 | |

※ RS-485 Connector Pin No. Assignment (RS-485) & Extension Cards(RS-485): DECA ME030-5802 or equivalent

| Pin No. | Function | Description |
|---|---|---|
| 1 | D- / DB | Differential digital signal used in the RS485 interface |
| 2 | D+ /DA | Differential digital signal used in the RS485 interface |
| 3,4 | FG | Common FG for signal |

※ RS-232 Connector Pin No. Assignment (RS-232): RJ11 6 position

| Pin No. | Function | Description |
|---|---|---|
| 1 | +5V_AUX | VCC |
| 2 | RXD | Data receiving pin of RS-232 interface |
| 3 | FG | Common FG for signal |
| 4 | TXD | Data transmitting pin of RS-232 interface |
| 5,6 | NC | Not used |

※ PMBus Connector Pin No. Assignment (PMBus) & Extension Cards(PMBus (PMBus 1,PMBus 2)): RJ45 8 positions

| Pin No. | Function | Description |
|---|---|---|
| 1,2,3,5,9,<br>10,11,13 | NC | Not use |
| 4,12 | CONTROL | Remote ON/OFF control pin (Note) |
| 6,14 | SDA | Serial Data used in the PMBus interface (Note) |
| 7,15 | SCL | Serial Clock used in the PMBus interface (Note) |
| 8,16 | FG | Common FG for signal |

Note: Isolated signal, with FG as reference

※ CANBus Connector Pin No. Assignment (CANBus) & Extension Cards(CANBus (CANBus 1,CANBus 2)): RJ45 8 positions

| Pin No. | Function | Description |
|---|---|---|
| 1,2,3,5,9,<br>10,11,13 | NC | Not use |
| 4,12 | CONTROL | Remote ON/OFF control pin (Note) |
| 6,14 | CAN-H | CAN-H used in the CAN Bus interface (Note) |
| 7,15 | CAN-L | CAN-L used in the CAN Bus interface (Note) |
| 8,16 | FG | Common FG for signal |

Note: Isolated signal, with FG as reference

※ Ethernet Connector Pin No. Assignment (Ethernet): RJ45 8 position

| Pin No. | Function | Description |
|---|---|---|
| 1 | TX+ | Transmit data used in the Ethernet interface |
| 2 | TX- | |
| 3 | RX+ | Receive data used in the Ethernet interface |
| 4,5,7,8 | FG | Common FG for signal |
| 6 | RX- | Receive data used in the Ethernet interface |

※ Extension Cards(RS-232)

| Pin No. | Function | Description |
|---|---|---|
| 1,4,6,7,8,9 | NC | Not used |
| 2 | RXD | Data receiving pin of RS-232 interface |
| 3 | TXD | Data transmitting pin of RS-232 interface |
| 4 | GND-FG | RS-232 common GND. This signal connects to FG and isolated from -V and GND-AUX |

※ Extension Cards(USB1,USB2): USB A Type

| Pin No. | Function | Description |
|---|---|---|
| 1 | +5V_AUX | VCC / max. 0.5A |
| 2 | D- | Data- |
| 3 | D+ | Data+ |
| 4 | FG | Common FG for signal |

## ■ Table for functionality of connectors

| Model | Relay | RS485 | AIN | AOUT | DIN | DOUT | PMBus | CANBus | RS-232 | Ethernet |
|---|---|---|---|---|---|---|---|---|---|---|
| CMU2A-#R# (Optional) | √ | X | X | X | X | X | X | √ | X | √ |
| CMU2C-P## | √ | X | X | X | √ | √ | √ | X | X | √ |
| CMU2C-R-P## | √ | X | X | X | √ | √ | √ | X | X | √ |
| CMU2C-C## | √ | X | X | X | √ | √ | X | √ | X | √ |
| CMU2C-R-C## | √ | X | X | X | √ | √ | X | √ | X | √ |
| CMU2E-### | √ | √ | X | X | √ | √ | X | X | X | √ |
| CMU2E-R-### | √ | √ | X | X | √ | √ | X | X | X | √ |

√: Functional
X: Not functional

## ■ Table for supported models

| Model | Supported series |
|---|---|
| CMU2A-#R# (Optional) | ERS-5000(H), ERG-5000(H) |
| CMU2C-P##<br>CMU2C-R-P## | DRP-3200, HEP-2300PM, NCP-3200, PHP-3500, PHP-3500HV, RCP-1600, SHP-10KPM, SHP-30KPM |
| CMU2C-C##<br>CMU2C-R-C## | DRP-3200CAN, HEP-2300CAN, NCP-3200CAN, PHP-3500CAN, PHP-3500HVCAN, RCP-1600CAN, SHP-10K, SHP-30K, BIC-2200 |
| CMU2E-###<br>CMU2E-R-### | NTN-5K |

## ■ Installation Instruction

① Din Rail

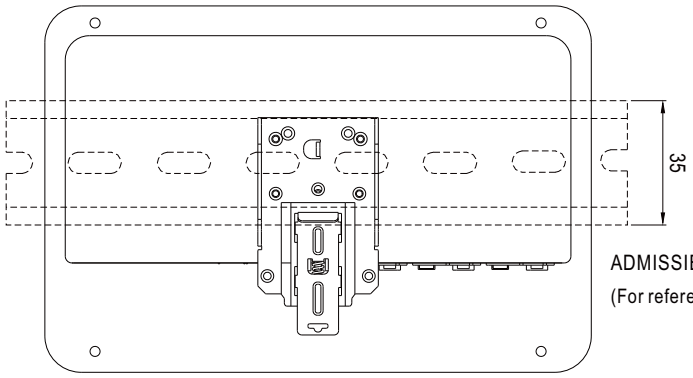


This series fits DIN rail TS35/7.5 or TS35/15.
For installation details, please refer to the Instruction manual.

ADMISSIBLE DIN-RAIL:TS35/7.5 OR TS35/15
(For reference only. Not included with unit.)

Back View

② Wallhanging

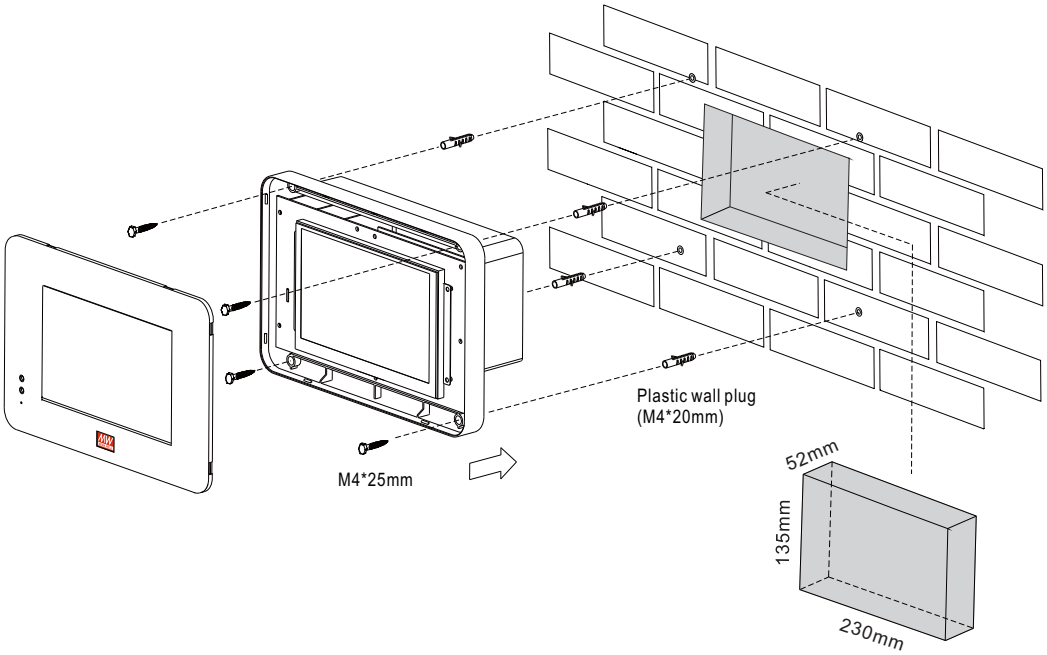


③ Desktop

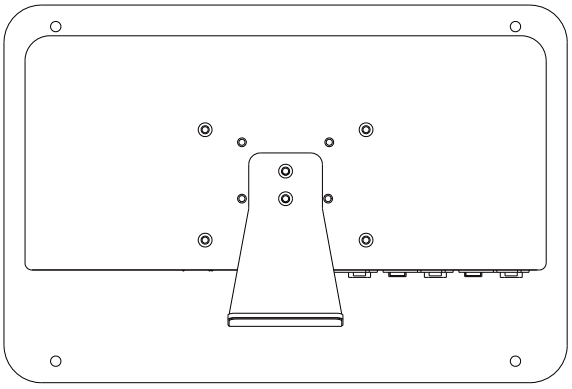

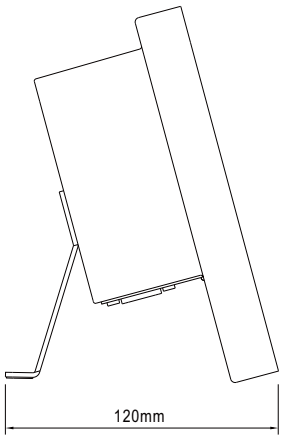

## ■ Accessory List

Accessories are included in corresponding models

| | | |
|---|---|---|
| ① | 1GG2DRP14A | 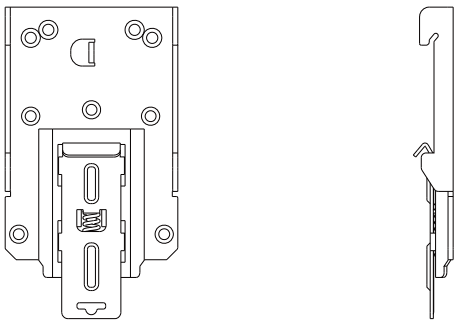 |
| ② | 1GG2MHS094 | 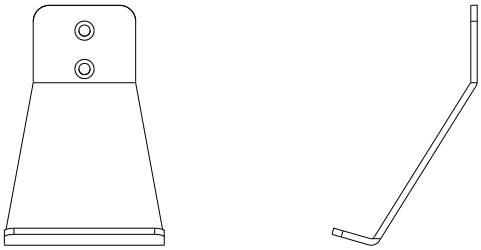 |

## ■ TYPICAL APPLICATION

### Application of Power Management

### Application of Burn-in System